Signature Series

Maximum Resilience Broadcast Audio

UBBU2 & 4

UNBALANCED TO BALANCED & BALANCED TO UNBALANCED CONVERTERS

2 & 4 Mono (1 & 2 Stereo) bi-directional balancing audio & gain converters

User Guide

Glensound
6 Brooks Place, Maidstone
Kent, UK, ME14 1HE
Tel: +44 (0)1622 753662
www.glensound.co.uk

Glensound
Keeps Working

Glensound Electronics Ltd

Thank you for choosing a new Glensound product.

All rights reserved.

Information contained in this manual is subject to change without notice, if in doubt please contact us for the latest product information.

If you need any help with the product then we can be contacted at:

Glensound Electronics Ltd
1 – 6 Brooks Place
Maidstone
Kent
ME14 1HE
United Kingdom

Telephone: +44 (0) 1622 753662

Fax: +44 (0) 1622 762330

EMAIL ADDRESSES

General enquires: office@glensound.co.uk

Technical enquires: techinfo@glensound.co.uk

Sales enquires: sales@glensound.co.uk

IMPORTANT SAFETY INSTRUCTIONS

Read this safety sheet prior to installation or initial use. This generic safety sheet covers multiple product configurations across our range. The full operating & installation manual and model-specific technical specifications are available online at: www.glensound.com

 DANGEROUS VOLTAGE: This symbol is intended to warn that dangerous voltages within the product are present and constitute a risk of electric shock.	 IMPORTANT INSTRUCTIONS: This symbol is intended to highlight that there are important operating, installation, and maintenance instructions in the literature accompanying this unit.
 **THIS UNIT MUST BE EARTHED (Class I Mains Models):** English: This symbol highlights that the equipment must have a valid earth connection with the protective earthing conductor. Danish: *Apparatets stikprop skal tilsluttes en stikkontakt med jord som giver forbindelse til stikproppens jord.* Finnish: *Laite on liitettävä suojakoskettimilla varustettuun pistorasiaan.* Norwegian: *Apparatet må tilkoples jordet stikkontakt.* Swedish: *Apparaten skall anslutas till jordat uttag.*	 **CAUTION – SHOCK HAZARD: DISCONNECT ALL POWER SOURCES:** This symbol warns that the product can be energised simultaneously from more than one power source (e.g., dual AC mains supplies, external DC power, and/or PoE). Care must be taken if accessing internal components. Ensure that ALL connected power supplies are fully disconnected.

1. Read & Keep Instructions: Read these instructions, keep these instructions, heed all warnings, and follow all instructions.

2. Indoor Use & Moisture: Unless otherwise specified in the model-specific manual, this product is intended for indoor use only. Do not use this apparatus near water, and do not expose this product to rain or moisture.

3. Ambient Temperature: The intended ambient operating temperature of this product is 0°C to 40°C (or 0°C to 50°C where specified in the model-specific technical specifications in the online user manual).

4. Cleaning & Heat Sources: Clean only with a dry cloth. Do not install near any heat sources such as radiators, heat registers, stoves, or other apparatus (including amplifiers) that produce heat.

5. Cable & Cord Protection: Protect all power cords and network cables from being walked on or pinched, particularly at plugs, convenience receptacles, and the point where they exit from the apparatus.

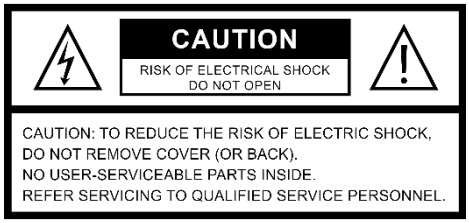



6. Attachments & Lightning: Only use attachments/accessories specified or supplied by the manufacturer. Unplug this apparatus during lightning storms or when unused for long periods of time.

7. Servicing & No User-Serviceable Parts: The product contains no user-serviceable parts and must not be disassembled or modified in any way. Doing so could result in personal injury and/or product failure. Refer all servicing to qualified service personnel. Servicing is required when the apparatus has been damaged in any way, such as when a power supply cord or plug is damaged, liquid has been spilled or objects have fallen into the apparatus, the apparatus has been exposed to rain or moisture, does not operate normally, or has been dropped.

8. Professional Environment: This equipment is not suitable for use in locations where children are likely to be present.

POWER SUPPLY & DISCONNECT INSTRUCTIONS (APPLICABLE BY MODEL CONFIGURATION)

9. Simultaneous / Redundant Power Sources (Mains, DC & PoE): Depending on the model, this product may be powered by a single source or simultaneously by multiple redundant power sources (dual AC mains inlets, an AC mains inlet, an external DC power input, and/or Power over Ethernet [PoE]). Disconnecting a single power lead will NOT isolate the unit if another power source remains connected. To completely de-energize the equipment, unplug ALL connected AC mains cords, DC barrel jack/external DC connectors, and PoE RJ45/etherCON network cables.

10. AC Mains Disconnect Devices (Single or Dual IEC Inlets): Where AC mains inlets are fitted, the mains plug(s) and rear-panel IEC appliance coupler(s) serve as the disconnect device(s). On dual-mains models, both mains' cords must be unplugged to isolate the unit from AC mains power. The socket-outlet(s) used for mains power must be installed near the equipment and be easily accessible.

11. Plug Grounding & Polarization (AC Mains Models): Do not defeat the safety purpose of the polarized or grounding-type plug. A polarized plug has 2 blades with one wider than the other. A grounding-type plug has 2 blades and a third grounding prong provided for your safety. If the provided plug does not fit into your outlet, consult an electrician for replacement of the obsolete outlet.

12. Approved Detachable Earthed Mains Cords (Class I AC Mains Models): Use only approved detachable 3-core earthed mains cords (minimum H05VV-F 3G0.75 mm² with IEC 60320-1 C13 connector) rated for the country of installation: • United Kingdom: Use a BS 1363-1 approved molded plug fitted with a 5 A ASTA-approved BS 1362 fuse. • European Union: Use a CEE 7/7 (Schuko/French) earthed plug. • Denmark: When connecting to wall socket-outlets in Denmark, use an approved 3-pin earthed plug complying with DS 60884-2-D1 (Standard Sheet DK 2-1a) to ensure protective earthing is maintained. • USA/Canada: Use a UL-listed / CSA-certified 3-conductor grounding power cord [minimum 18 AWG, SVT/SJT] with a NEMA 5-15P plug. • All other regions: Use a nationally safety-approved 3-core earthed mains cord rated for the country of installation.

13. Internal Primary Fusing & Neutral Fusing Warning (AC Mains Models – Service Personnel Only): Internal primary fuse(s) are located between the Live terminal of the IEC inlet and the Live input of the power supply and should only be changed by a qualified service engineer using a correctly rated replacement as specified in the product handbook. WARNING – Neutral Fusing: Because the AC mains plug may be reversible in some electrical distribution systems, the internal primary fuse may be located in the neutral conductor. Always disconnect all AC mains power cords completely from the IEC inlet(s) to de-energize all phase conductors before opening the enclosure or servicing the unit.

14. Power over Ethernet (PoE) Models: Unplugging the RJ45 / etherCON network cable disconnects PoE power from the unit. The Ethernet cable intended to be connected to the unit is for indoor building routing only and must not exit the building structure without appropriate primary surge protection.

15. External DC / USB Power Input Models: Connect only the manufacturer-supplied AC/DC power adaptor (where provided), or a safety-approved external DC or USB power supply complying with BS EN IEC 62368-1 (classified as ES1 and PS2/Limited Power Source [LPS]) that matches the voltage, minimum current rating, and pin polarity marked adjacent to the DC/USB input connector or specified in the product manual. The external power adaptor plug and the DC/USB input connector serve as the DC disconnect devices and must remain readily accessible; unplugging the DC/USB connector disconnects external DC power only and will not isolate the unit if AC mains or PoE remains connected.

INSTALLATION, THERMAL, MECHANICAL & OPTICAL SAFETY (APPLICABLE BY MODEL CONFIGURATION)

16. Ventilation & Sealed Heatsink Enclosures: Do not block any ventilation openings; install in accordance with the manufacturer's instructions. On models where the aluminum enclosure acts as the units heatsink, do not cover the unit or speaker grille with soft furnishings, cloths, or curtains, and allow free airflow around the housing.



17. 19-Inch Equipment Rack Installation (Rack-Mount Models): Rack-mounted models are designed for stationary installation in a standard 19-inch equipment rack. Secure the unit to the front rack rails using all four mounting holes on the integral rack ears with appropriate rack screws (e.g., M6 screws and cage nuts). Ensure that ventilation openings on the chassis are not obstructed by rack walls or cabling.

18. Carts, Stands, Brackets & Tip-Over Hazard: Use only with the cart, stand, tripod, bracket, or table specified by the manufacturer, or sold with the apparatus. When a cart is used, use caution when moving the cart/apparatus combination to avoid injury from tip-over.

19. Optical SFP Transceiver Modules (Where fitted): Any optical SFP transceiver modules installed in this product must be certified Class 1 Laser Products in accordance with IEC/EN 60825-1. Do not look directly into open optical ports or fiber-optic cable ends while the equipment is energized.



Disposal (WEEE): the crossed-out wheeled bin symbol means this product must not be disposed of with household waste. Take it to an approved electrical and electronic equipment recycling point, or contact Glensound for advice.
Declaration of conformity: Glensound declares that this product complies with the applicable UK and EU legislation. The full declaration of conformity is available at www.glensound.com.
Manufacturer: Glensound Electronics Ltd, The Design Buildings, 6 Brooks Place, Maidstone, Kent, ME14 1HE, UK · Tel: +44 (0)1622 753662 · Email: sales@glensound.com · www.glensound.com

CE

This equipment manufactured by Glensound Electronics Ltd of Brooks Place Maidstone Kent ME14 1HE is CE marked and conforms to:

Low Voltage Directive: EN60065

Emissions: EN55103.1

Immunity: EN55103.2

WASTE ELECTRICAL AND ELECTRONIC EQUIPMENT REGULATIONS 2006 (WEEE)

Glensound Electronics Ltd is registered for business to business sales of WEEE in the UK our registration number is:

WEE/JJ0074UR

RoHS2 DIRECTIVE

EC directive 2011/65/EU restricts the use of the hazardous substances listed below in electrical and electronic equipment.

This product conforms to the above directive and for this purposes, the maximum concentration values of the restricted substances by weight in homogenous materials are:

Lead	0.1%
Mercury	0.1%
Hexavalent Chromium	0.1%
Polybrominated Biphenyls	0.1%
Polybrominated Diphenyl Ethers	0.1%
Cadmium	0.01%

PRODUCT WARRANTY:

All equipment is fully tested before dispatch and carefully designed to provide you with trouble free use for many years.

We have a policy of supporting products for as long as possible and guarantee to be able to support your product for a minimum of 10 years.

For a period of one year after the goods have been despatched the Company will guarantee the goods against any defect developing after proper use providing such defects arise solely from faulty materials or workmanship and that the Customer shall return the goods to the Company's works or their local dealer.

All non-wear parts are guaranteed for 2 years after despatch and any defect developing after proper use from faulty materials or workmanship will be repaired under this warranty providing the Customer returns the goods to the Company's works or their local dealer.

UBBU2 & 4 Bi-Directional Balance Converters

Handbook Contents

Issue 1,

Description Page No.

Contents

IMPORTANT SAFETY INSTRUCTIONS ..... **Error! Bookmark not defined.**
PRODUCT WARRANTY: 6
OVERVIEW 8
PHYSICAL INSTALLATION 9
AUDIO BLOCK DIAGRAMS 11
EXAMPLES OF USE 13
1. Domestic CD Recorder Interface to a Broadcast Desk 13
USER CONTROLS & CONNECTIONS 14
1. Power On LED 14
2. Unbalanced Stereo Input 15
3. Balanced Stereo Output 15
4. Balanced Stereo Input 15
5. Unbalanced Stereo Output 15
6. Unbalanced Input Gain Controls 16
7. Balanced Input Gain Controls 16
8. External DC Input 16
9. Mains In 16
WIRING INFORMATION 17
1. Standard Pin Outs 17
TECHNICAL SPECIFICATION UBBU2 18
TECHNICAL SPECIFICATION UBBU4 19

OVERVIEW

This handbook covers two products both with the same facilities just with different quantities of these facilities.

Signature UBBU2 is a single stereo/ dual mono unbalanced to balanced and balanced to unbalanced converter.

Signature UBBU4 is a twin stereo/ quad mono unbalanced to balanced and balanced to unbalanced converter.

The Glensound Signature Series UBBU range are professional audio bi-directional balance converters. They are manufactured using high quality components and low noise audio circuits to provide many years of trouble free use.

They are most commonly used for interconnecting domestic type recording/ playback devices to broadcast/ professional equipment.

Their primary job is to interface domestic type audio outputs (unbalanced) to the balanced audio inputs on broadcast and professional audio equipment while simultaneously connecting balanced outputs from professional equipment to the unbalanced inputs on domestic products.

As well as providing the balancing interface the UBBU units also provide variable gain/ loss to allow the two connected pieces of equipment to match audio levels.

All the stereo circuits can both work as dual mono. All the inputs are electronically isolated with RF filters to prevent extraneous signals, and fed via multi-turn preset gain controls on the rear panel to their outputs.

The rear panel gain controls are multi-turn presets to allow accurate gain setting and are also recessed to prevent accidental movement.

Although traditionally a broadcast manufacturer, Glensound's products are equally at home in professional and high end home studios, industrial installations and live pro sound environments. The U2B range can therefore be used in a number of applications.

The U2B range are powered from internal switch mode mains power supplies fed from filtered IEC mains plugs suitable for use Worldwide. They have an internal fuse for safety. The units can also alternatively be powered from external +/-12V DC power sources (such as the Signature Series PS1). If both mains and external DC power sources are present then, if one power source were to fail the unit would continue to work seemlessly from the other source.

PHYSICAL INSTALLATION

The Glensound Signature Series have been designed to be highly versatile for installation and can be installed in 19" racks with either their front or rear panels facing the front of the rack. They can also be mounted underneath desks or work tops and can be either permananetly mounted or stood (using the supplied feet) on top of desks or worktops.

INSTALLING SIGNATURE SERIES IN A 19" RACK

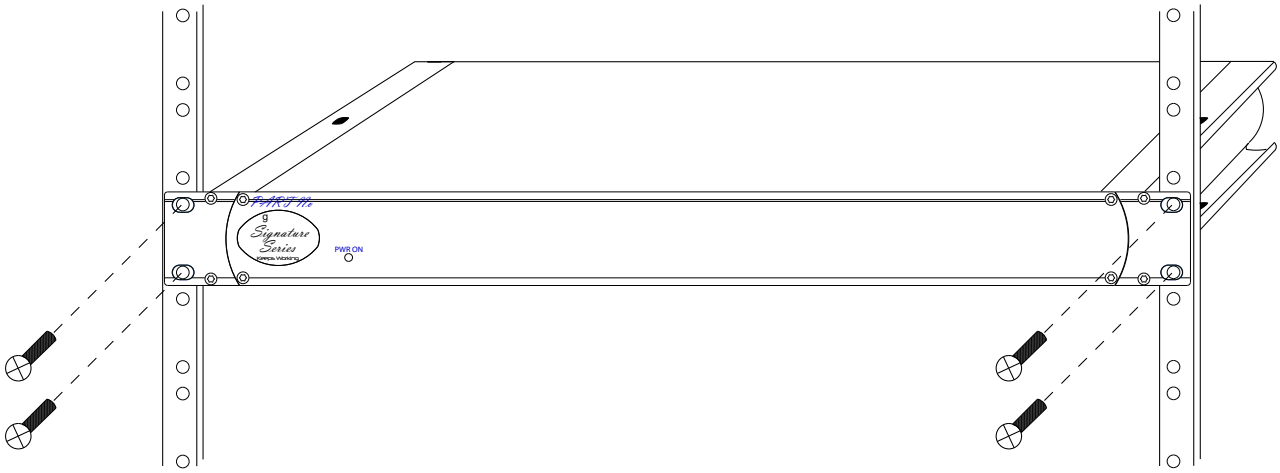

Firmly hold the signature subrack within the 19" rack and locate in 1RU of space. Use the supplied 6mm rack screws to securly attach the unit to the rack.

INSTALLING ADHSIVE FEET FOR NON PERMANENT TABLE TOP MOUNTING



Remove the front rack ears (if they are not required), turn the unit upside down and attach the supplied 4 sticky feet as per the above drawing.

SWAPPING RACK EARS TO ALLOW THE REAR TO BE INSTALLED AT THE FRONT OF A RACK

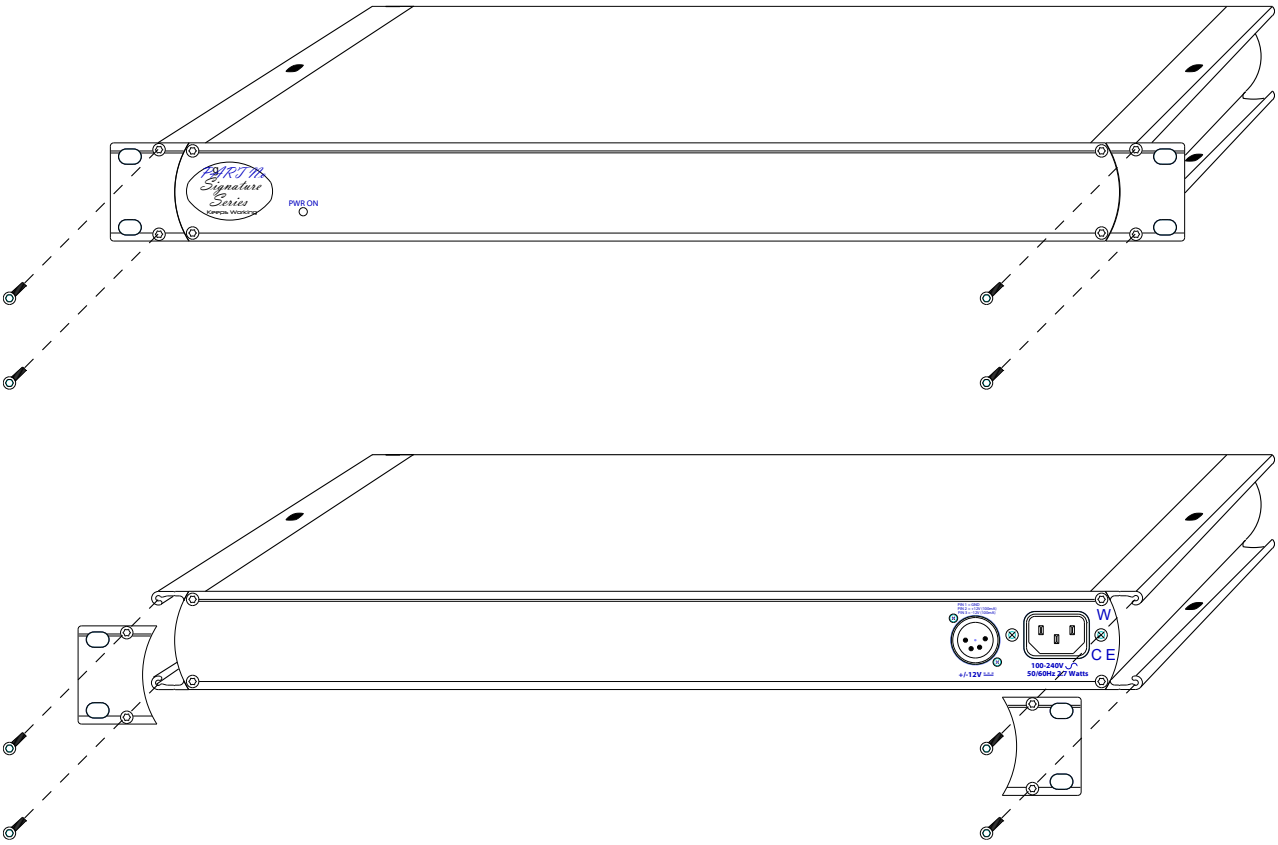

First remove the 4 silver button head screws that fix the rack ears onto the front of the unit as shown in the top picture above.

Remove the rack ears and turn the unit around for access to its back panel.

Re-fit the 2 rack ears using the same 4 silver button head screws that were removed from the front as per the bottom picture above.

USING THE MOUNTING HOLES FOR PERMANENTLY ATTACHING THE UNIT ABOVE OR BELOW A WORKTOP/ DESK

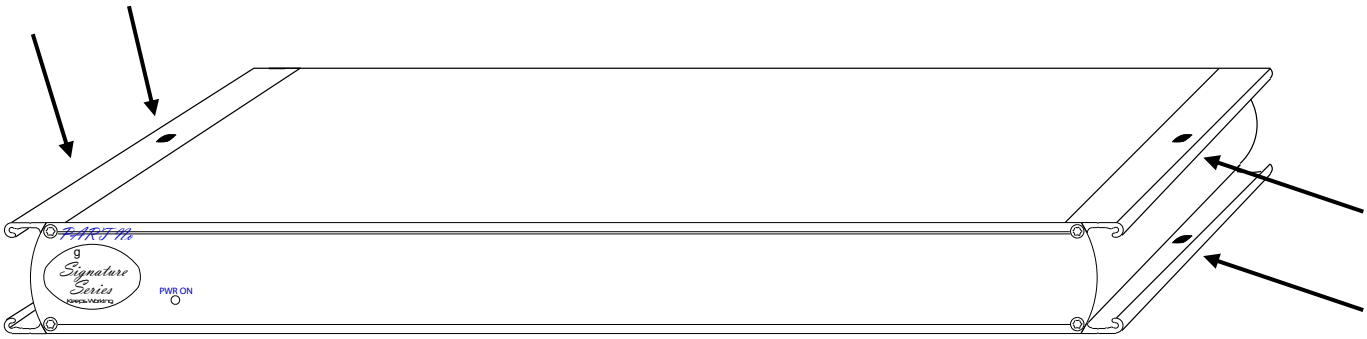

Use either the top or bottom mounting holes as indicated above to use suitable screws to attach the signature unit to a worktop or bench. **PLEASE ENSURE THAT YOU USE SUITABLE FIXINGS**

AUDIO BLOCK DIAGRAMS

1. UBBU2

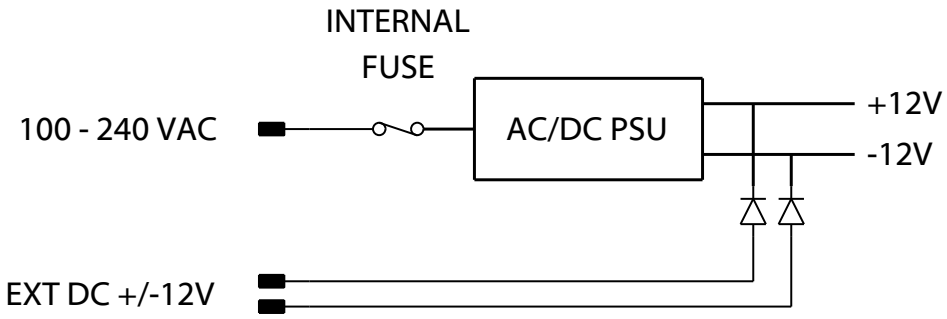

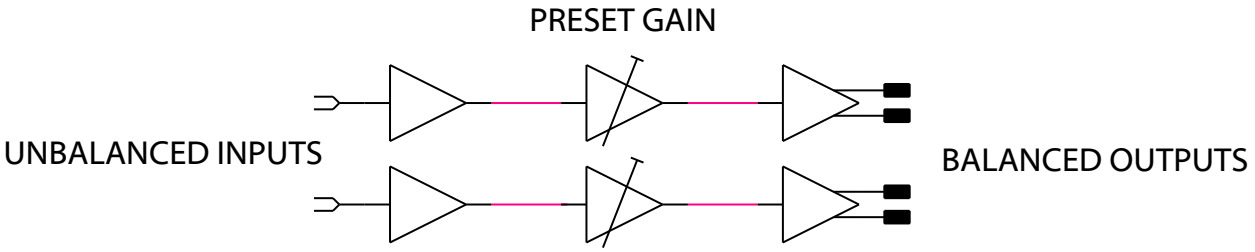

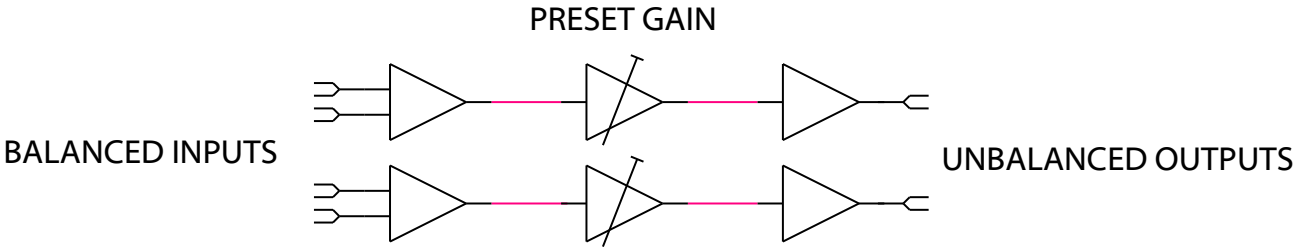

2. UBBU4

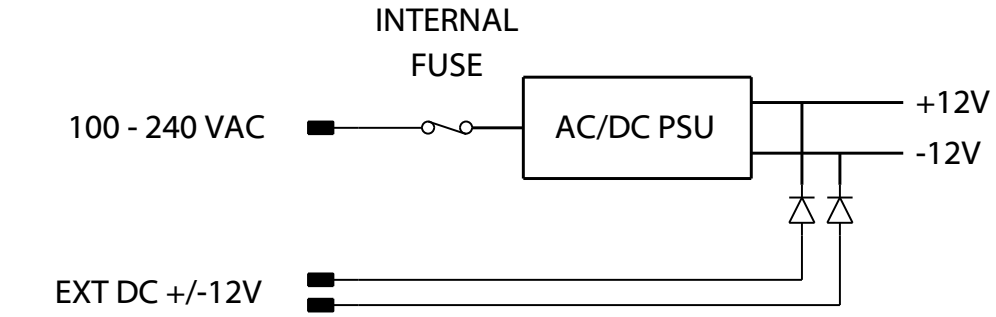
INTERNAL
FUSE
100 - 240 VAC
AC/DC PSU
+12V
-12V
EXT DC +/-12V

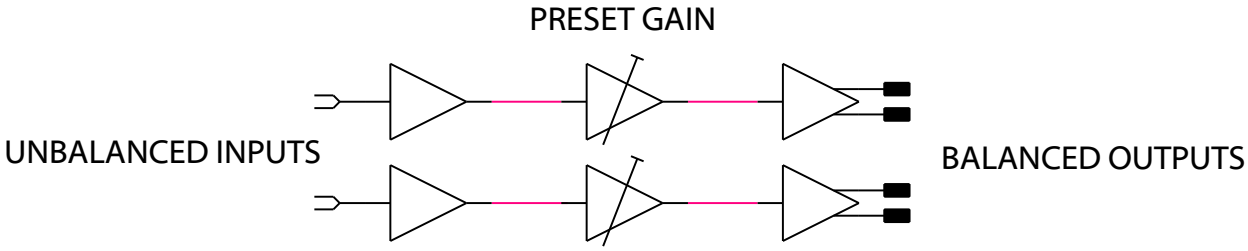
PRESET GAIN
UNBALANCED INPUTS
BALANCED OUTPUTS

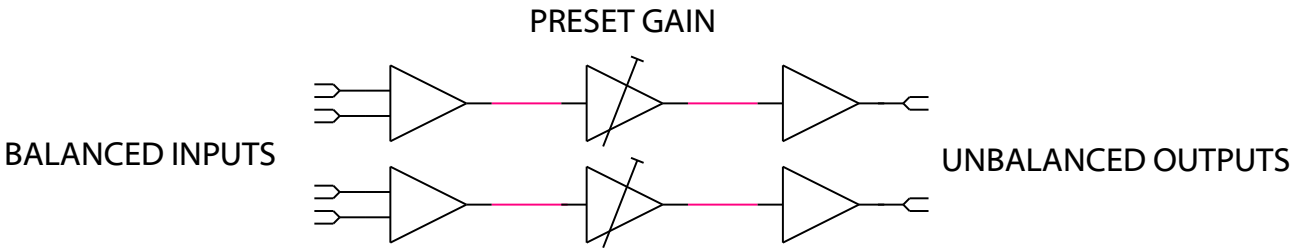
PRESET GAIN
BALANCED INPUTS
UNBALANCED OUTPUTS

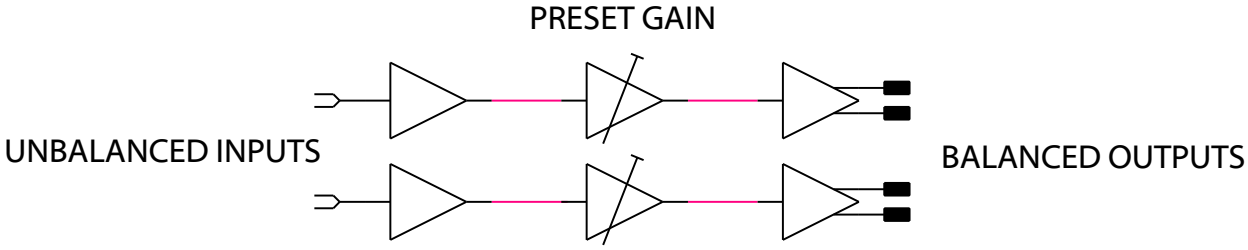
PRESET GAIN
UNBALANCED INPUTS
BALANCED OUTPUTS

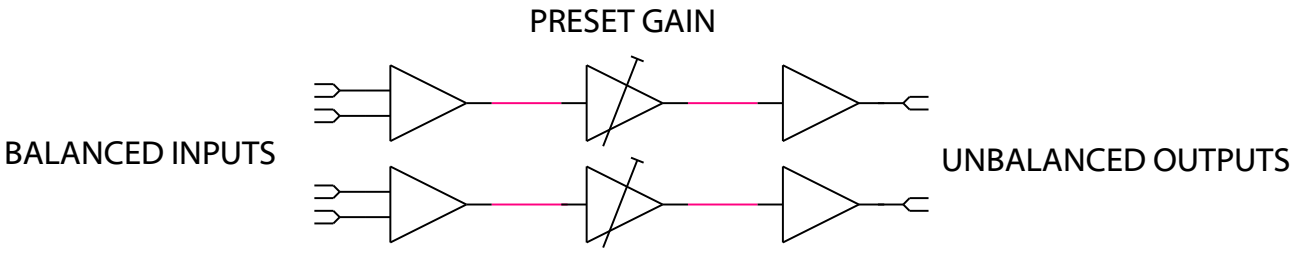
PRESET GAIN
BALANCED INPUTS
UNBALANCED OUTPUTS

EXAMPLES OF USE

1. Domestic CD Recorder Interface to a Broadcast Desk

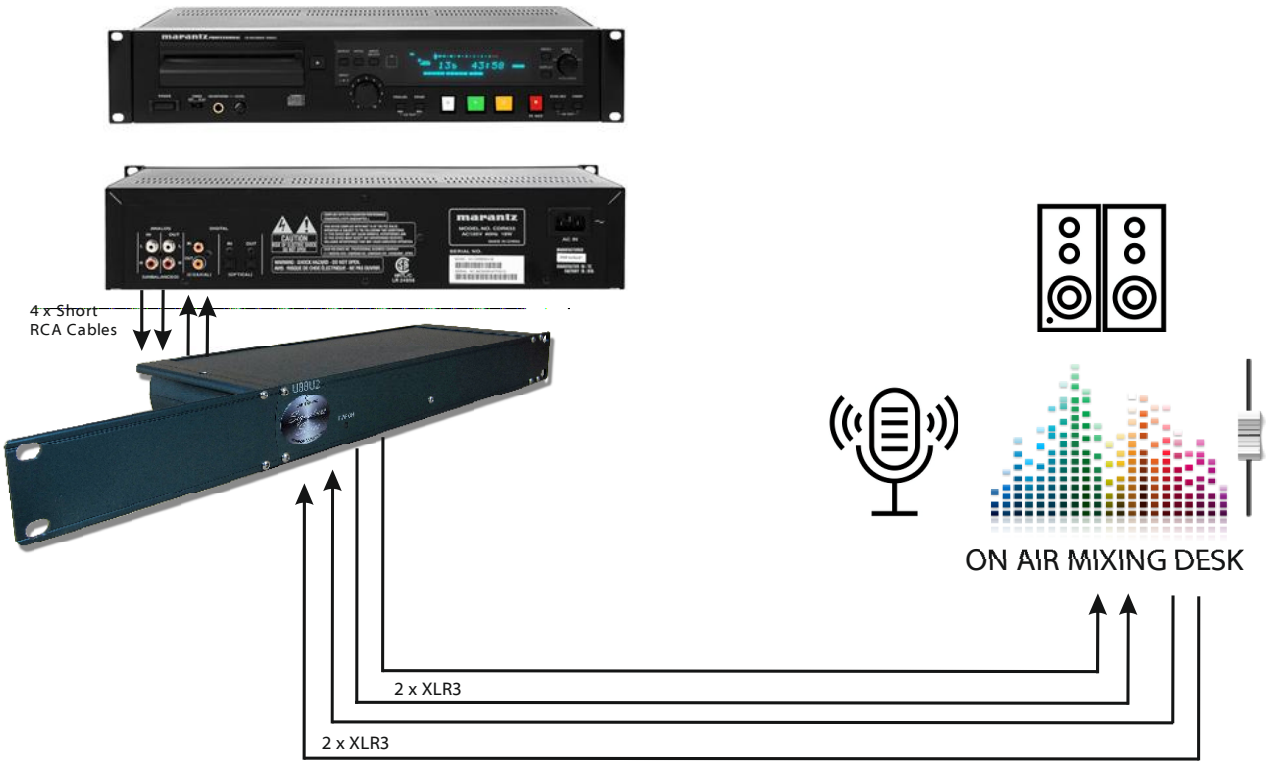

Many radio stations and studios incorporate mid-level domestic audio equipment such as CD recorders as they provide reasonable value for money in comparison to professional versions. The output of such devices need to be correctly interfaced with a professional or broadcast audio desk.

In this example the UBBU2 will be located near the CD player as it is prudent to keep the unbalanced audio cables as short as practicable. The UBBU is performing both balance conversion (in and out) and adding gain/ loss to adjust the low domestic input & output level of the CD recorder to the higher levels associated with professional mixing desks.

The inputs & outputs of the UBBU2 on the mixer side, being balanced are more suitable for longer cable runs and therefore the CD recorder/ UBBU2 equipment can be placed much further away from the mixer than the CD recorder alone could ever be.

USER CONTROLS & CONNECTIONS

Note: Picture & description is for the UBBU2 but facilities scale up to the UBBU4.

FRONT PANEL



1. Power On LED

The front panel bright blue LED shows that the unit is powered on and functioning correctly.

REAR PANEL

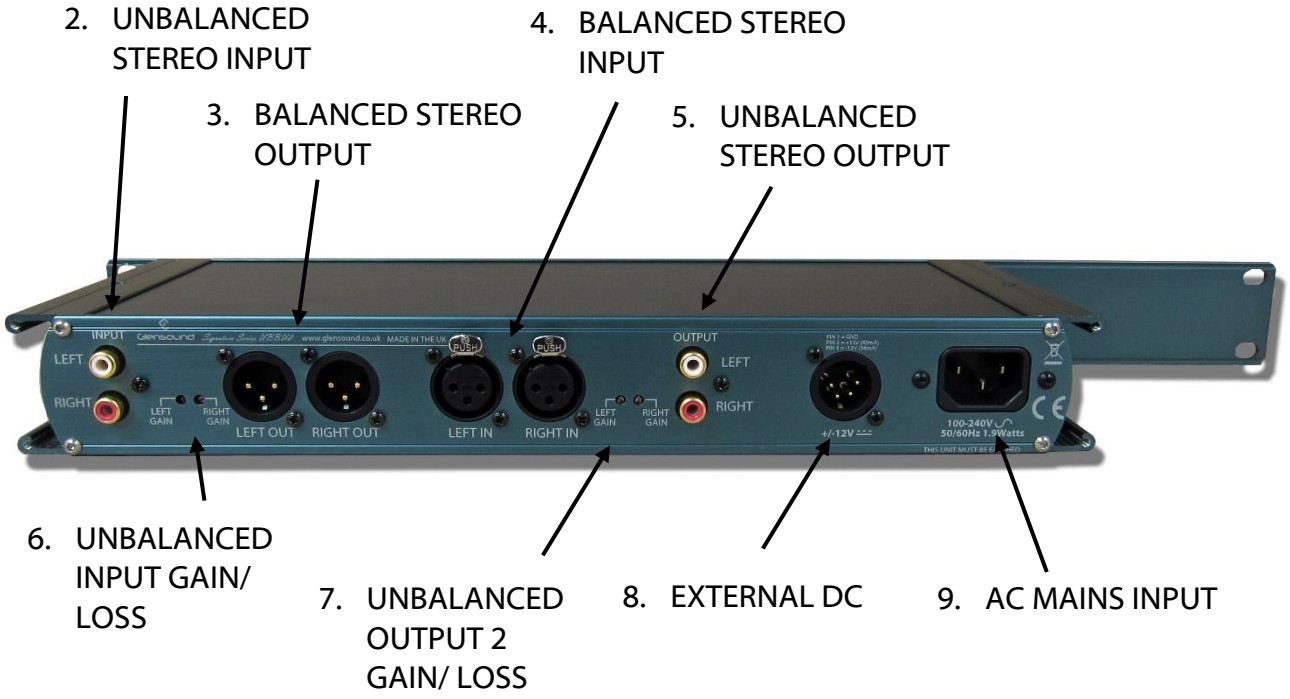

2. Unbalanced Stereo Input

One pair of stereo (can be used dual mono) RCA phono unbalanced audio inputs. The white connector is normally used for the left audio channel of a stereo pair and the red connector is usually used for the right audio channel of a stereo pair.

3. Balanced Stereo Output

These Neutrik 3 pin XLR plugs provided the balanced audio outputs of the unbalanced audio source. They are electronically balanced with wide band low noise circuitry. The output level can be adjusted using gain controls (see 6).

4. Balanced Stereo Input

One pair of stereo (can be used dual mono) Neutrik XLR electronically balanced audio inputs.

5. Unbalanced Stereo Output

These RCA Phono sockets provided the unbalanced audio outputs of the balanced audio source. They are electronically balanced with wide band low noise circuitry. The output level can be adjusted using gain controls (see 7).

6. Unbalanced Input Gain Controls

These multi turn preset potentiometers adjust the audio level between the unbalanced inputs and the balanced outputs. Turning the potentiometer clockwise increases the gain (and therefore the output level) and turning the potentiometer anti-clockwise decreases the gain (and therefore reduces the output level).

7. Balanced Input Gain Controls

These multi turn preset potentiometers adjust the audio level between the balanced inputs and the unbalanced outputs. Turning the potentiometer clockwise increases the gain (and therefore the output level) and turning the potentiometer anti-clockwise decreases the gain (and therefore reduces the output level).

8. External DC Input

This DC input can be used instead or as well as the mains input. It requires a +/- 12V power source (such as our PS1). If used in conjunction with the mains input it will seamlessly provide a redundant power source.

9. Mains In

This AC input accepts a wide range power supply, suitable for use Worldwide. If used in conjunction with the external DC supply then a seamless redundant power supply will be provided.

WIRING INFORMATION

1. Standard Pin Outs

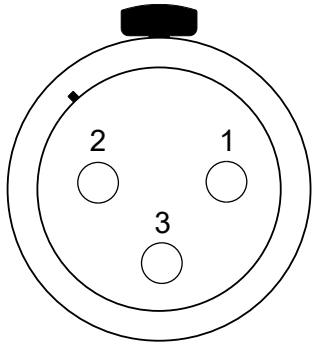

XLR SOCKET (FEMALE)

STANDARD XLR AUDIO PINOUTS:

1: Ground/ Earth

2: INPHASE/ POSITIVE/ MIC +

3: MATE/ NEGATIVE/ MIC -

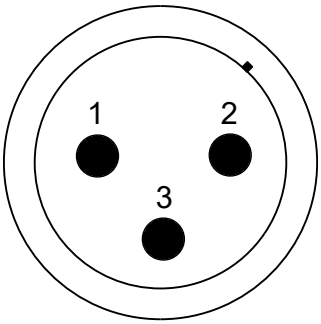

XLR PLUG (MALE)

UNBALANCED RCA PHONO

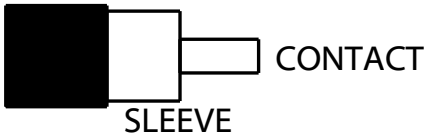

RCA PHONO PLUG (MALE)

CONTACT: Signal

SLEEVE: Common/ Earth

TECHNICAL SPECIFICATION UBBU2

AUDIO UNBALANCED TO BALANCED

Frequency Response @ Line Up
<=/-0.1dB 40Hz to 20kHz

Gain Range
-15dB to +15dB on each output

Line Up Level (with 0dB Gain)
-12dBu on unbalanced input = 0dBu on balanced output

Maximum Input Level
>+28dBu

Maximum Output Level
+24dBu

Input Impedance
>22k Ohm

Output Impedance
=<50 Ohms

Distortion
0.04% THD @ 100Hz, 1kHz & 0.01% @ 10kHz
Reference to +0dBu output

Noise
-98dB @ line up unweighted
RMS (22Hz to 22kHz) ref +8dBu output

Crosstalk
<-90dBu 1kHz to 15kHz @ lineup

AUDIO BALANCED TO UNBALANCED

Frequency Response @ Line Up
<=/-0.1dB 40Hz to 20kHz

Gain Range
-18dB to +10dB on each output

Line Up Level (with 0dB Gain)
0dBu on balanced input = -12dBu on unbalanced output

Maximum Input Level
>+28dBu

Maximum Output Level
+20dBu

Input Impedance
>50k Ohm

Output Impedance
=<50 Ohms

Noise
-103dB @ line up unweighted
RMS (22Hz to 22kHz) ref -4dBu output

Crosstalk
<-90dBu 1kHz to 15kHz @ lineup

POWER

Mains Input
Filtered IEC, 100 to 240VAC
47 - 63Hz

AC Consumption
1.3 Watts @ 230VAC

DC Input
4 Pin Neutrik XLR plug +/- 12V

Internal Mains Fuse
20mm 1A Anti Surge

PHYSICAL

Size
338 x 123 x 44mm (LxDxH) no rack ears
482mm 19" (1RU) with rack ears

Weight
1.00kg

Mechanics
All aluminium construction, anodized and laser etched

Shipping Carton
Rugged export quality cardboard carton
610 x 420 x 130mm LxDxH

Shipping Weight
2.3kg

INCLUDED

Mains Lead
2 Metre Long Mains Lead
(UK & Europe only)

Rack Bolts
4 off Hex head M6

Feet
4 off rubber stick on feet

Handbook
Full A4 handbook available to download and linked by QR code on device

Quick Start Guide
Printed A4 two sided quick start guide

E & OE

TECHNICAL SPECIFICATION UBBU4

AUDIO UNBALANCED TO BALANCED

Frequency Response @ Line Up
<=/-0.1dB 40Hz to 20kHz

Gain Range
-15dB to +15dB on each output

Line Up Level (with 0dB Gain)
-12dBu on unbalanced input = 0dBu on balanced output

Maximum Input Level
>+28dBu

Maximum Output Level
+24dBu

Input Impedance
>22k Ohm

Output Impedance
=<50 Ohms

Distortion
0.04% THD @ 100Hz, 1kHz & 0.01% @ 10kHz
Reference to +0dBu output

Noise
-98dB @ line up unweighted
RMS (22Hz to 22kHz) ref +8dBu output

Crosstalk
<-90dBu 1kHz to 15kHz @ lineup

AUDIO BALANCED TO UNBALANCED

Frequency Response @ Line Up
<=/-0.1dB 40Hz to 20kHz

Gain Range
-18dB to +10dB on each output

Line Up Level (with 0dB Gain)
0dBu on balanced input = -12dBu on unbalanced output

Maximum Input Level
>+28dBu

Maximum Output Level
+20dBu

Input Impedance
>50k Ohm

Output Impedance
=<50 Ohms

Noise
-103dB @ line up unweighted
RMS (22Hz to 22kHz) ref -4dBu output

Crosstalk
<-90dBu 1kHz to 15kHz @ lineup

POWER

Mains Input
Filtered IEC, 100 to 240VAC
47 - 63Hz

AC Consumption
1.3 Watts @ 230VAC

DC Input
4 Pin Neutrik XLR plug +/- 12V

Internal Mains Fuse
20mm 1A Anti Surge

PHYSICAL

Size
445 x 123 x 44mm (LxDxH) no rack ears
482mm 19" (1RU) with rack ears

Weight
1.10kg

Mechanics
All aluminium construction, anodized and laser etched

Shipping Carton
Rugged export quality cardboard carton
610 x 420 x 130mm LxDxH

Shipping Weight
2.4kg

INCLUDED

Mains Lead
2 Metre Long Mains Lead
(UK & Europe only)

Rack Bolts
4 off Hex head M6

Feet
4 off rubber stick on feet

Handbook
Full A4 handbook available to download and linked by QR code on device

Quick Start Guide
Printed A4 two sided quick start guide

E & OE